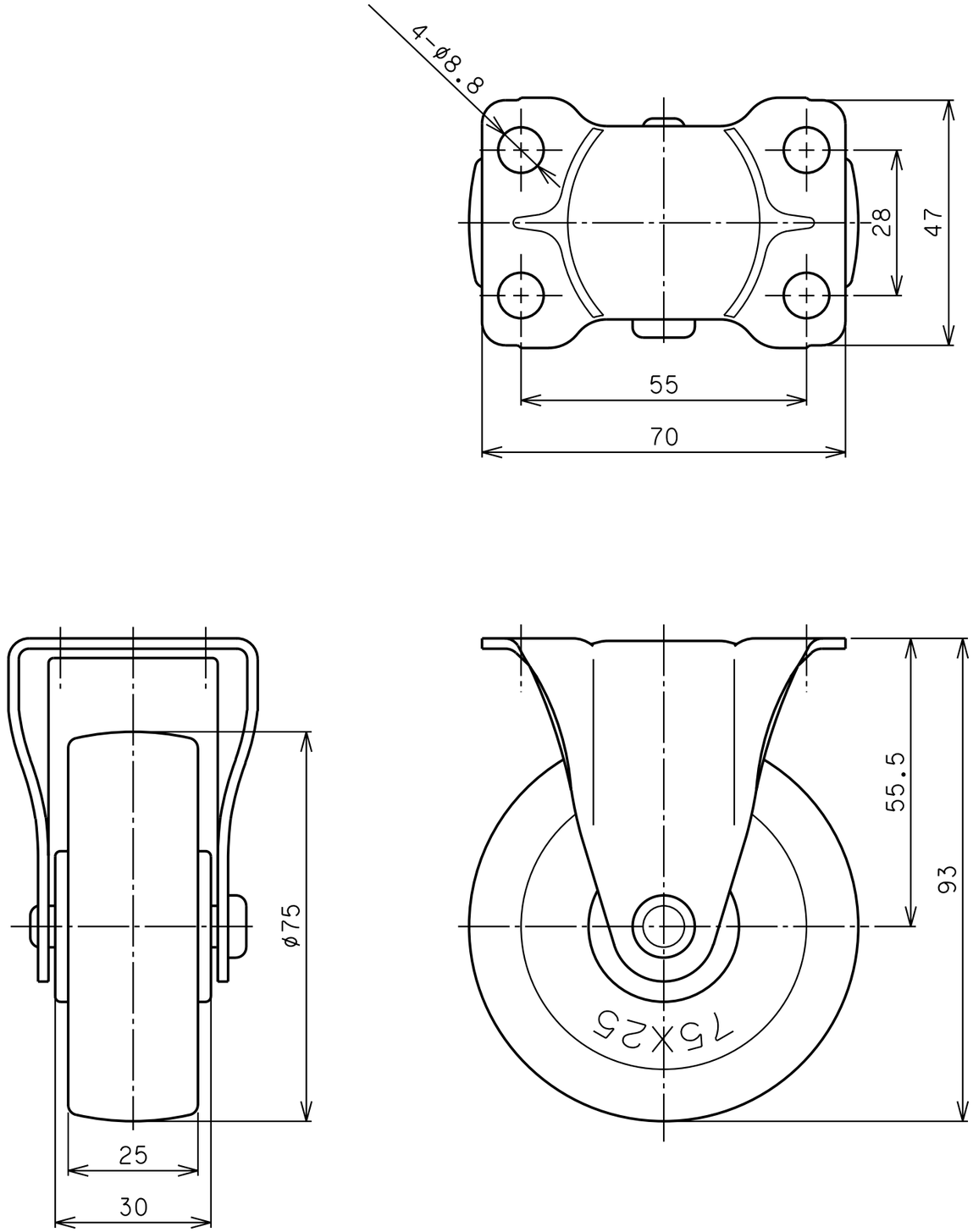

品名	SUS-SK- 75 R	図番	S25H0RAA-C01	GOLD CASTER