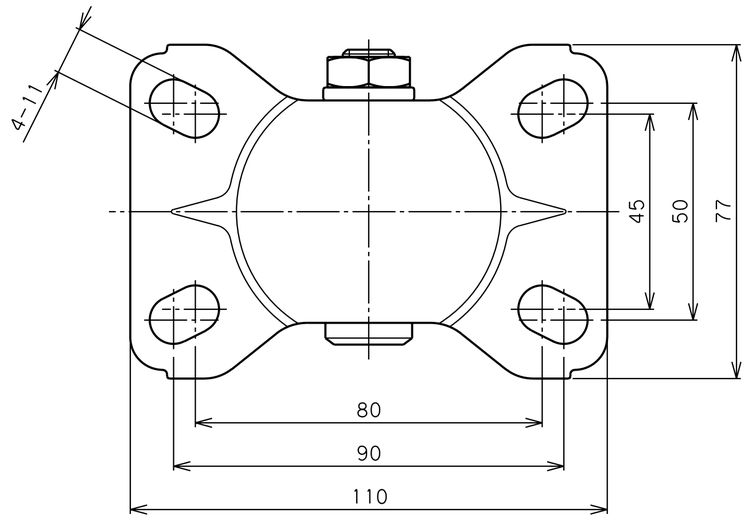

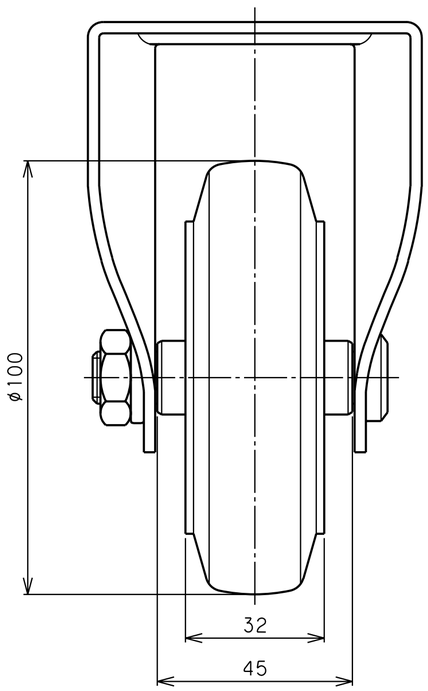

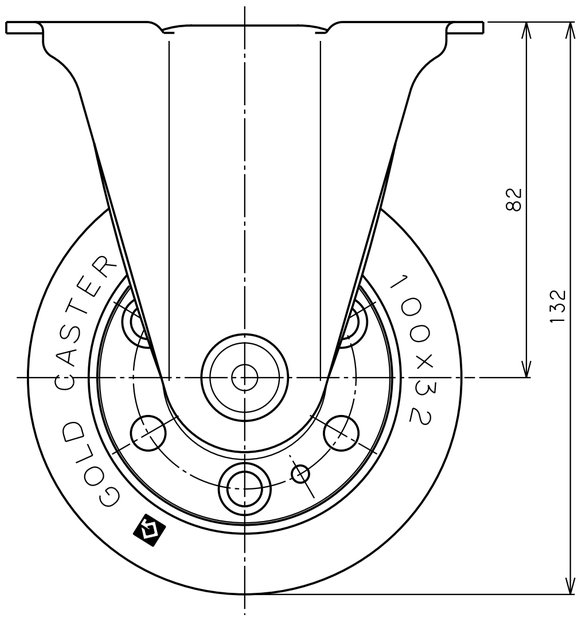

品名	SK-100 RB	図番	S30B0AAA-C02	GOLD CASTER