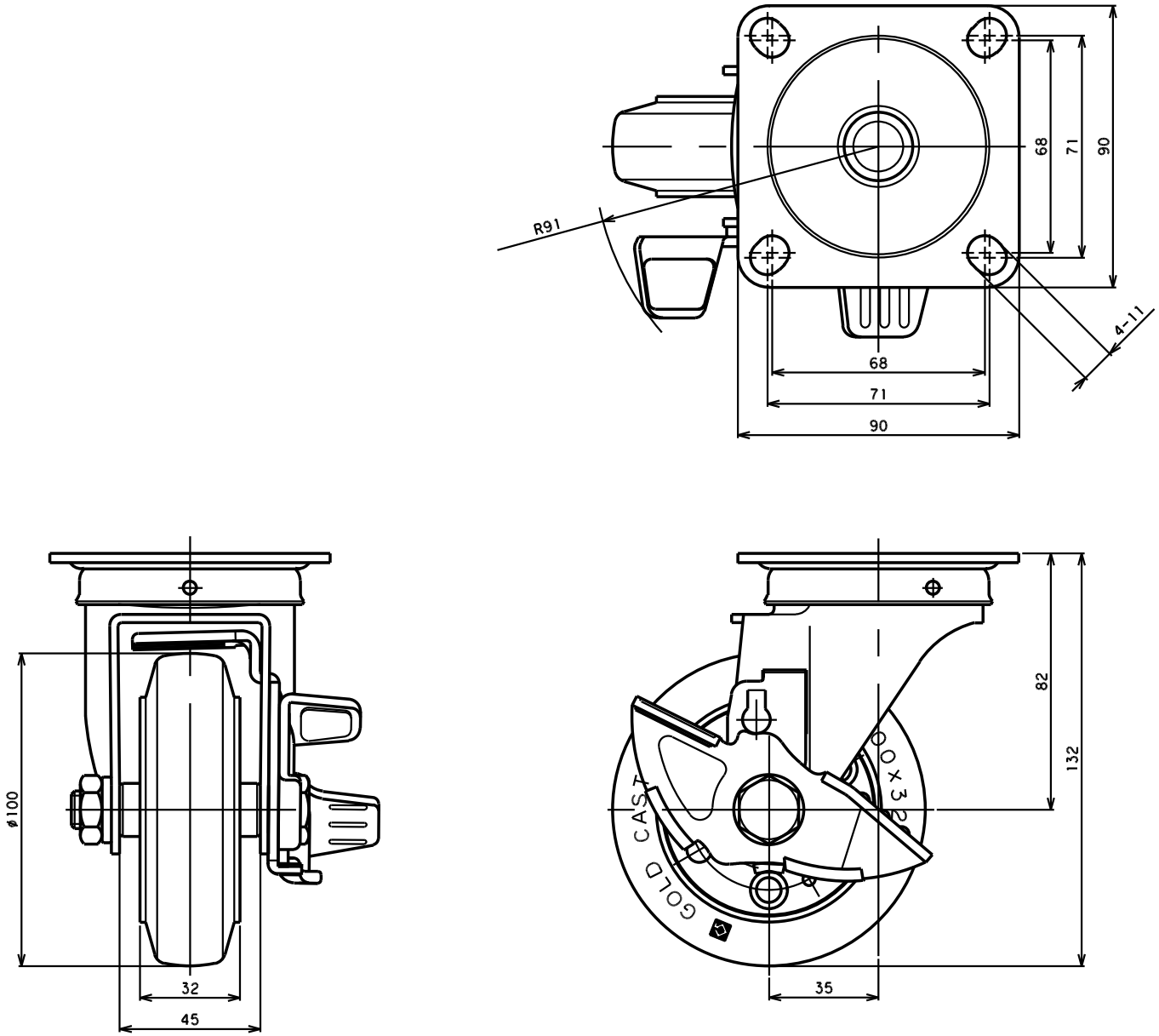

品名	SJ-100 RB S	図番	S30A6AAA-C01	GOLD CASTER