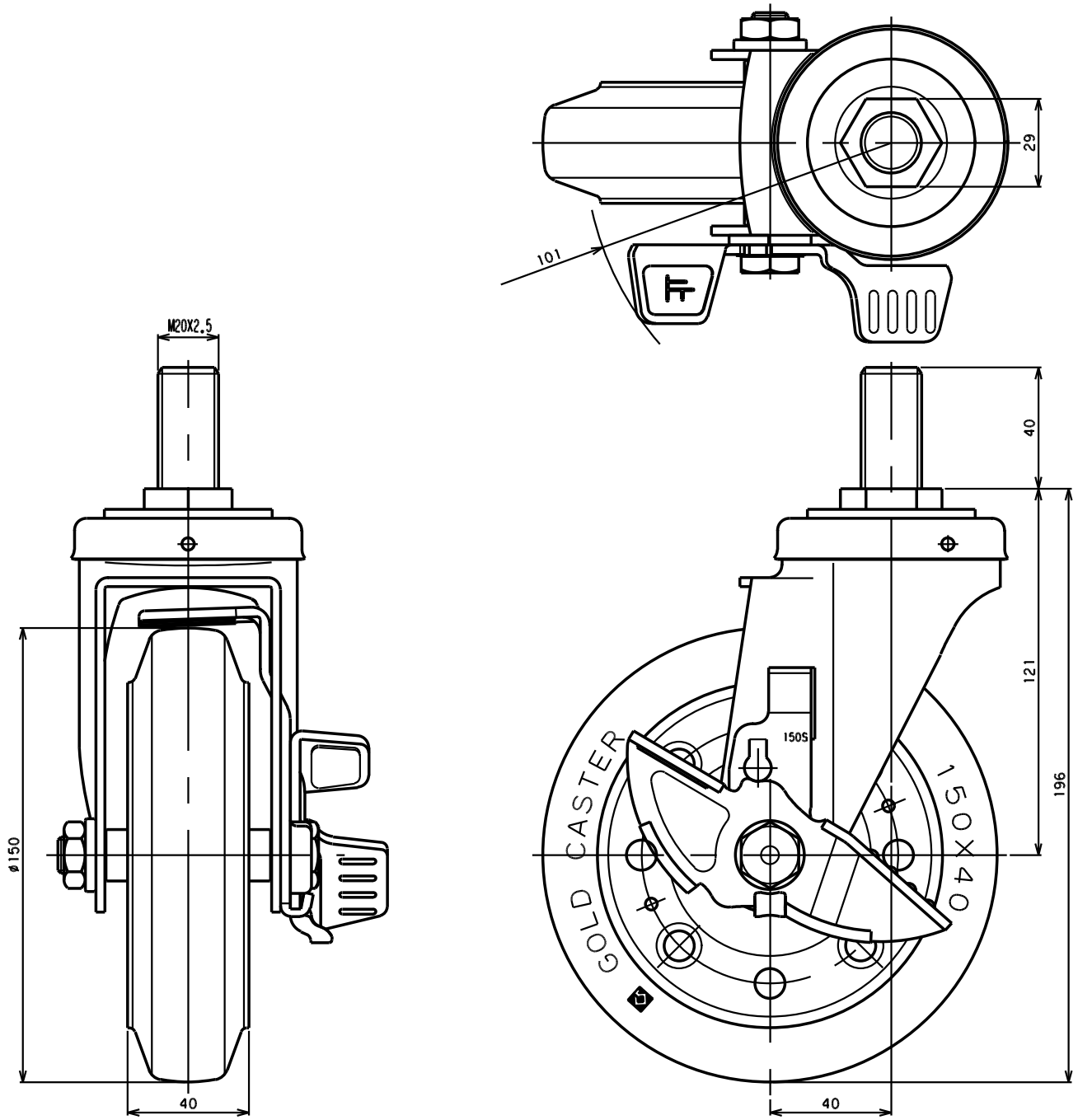

品名	SA-150 20×40 RB S	図番	S40DA6AAA-C02	GOLD CASTER